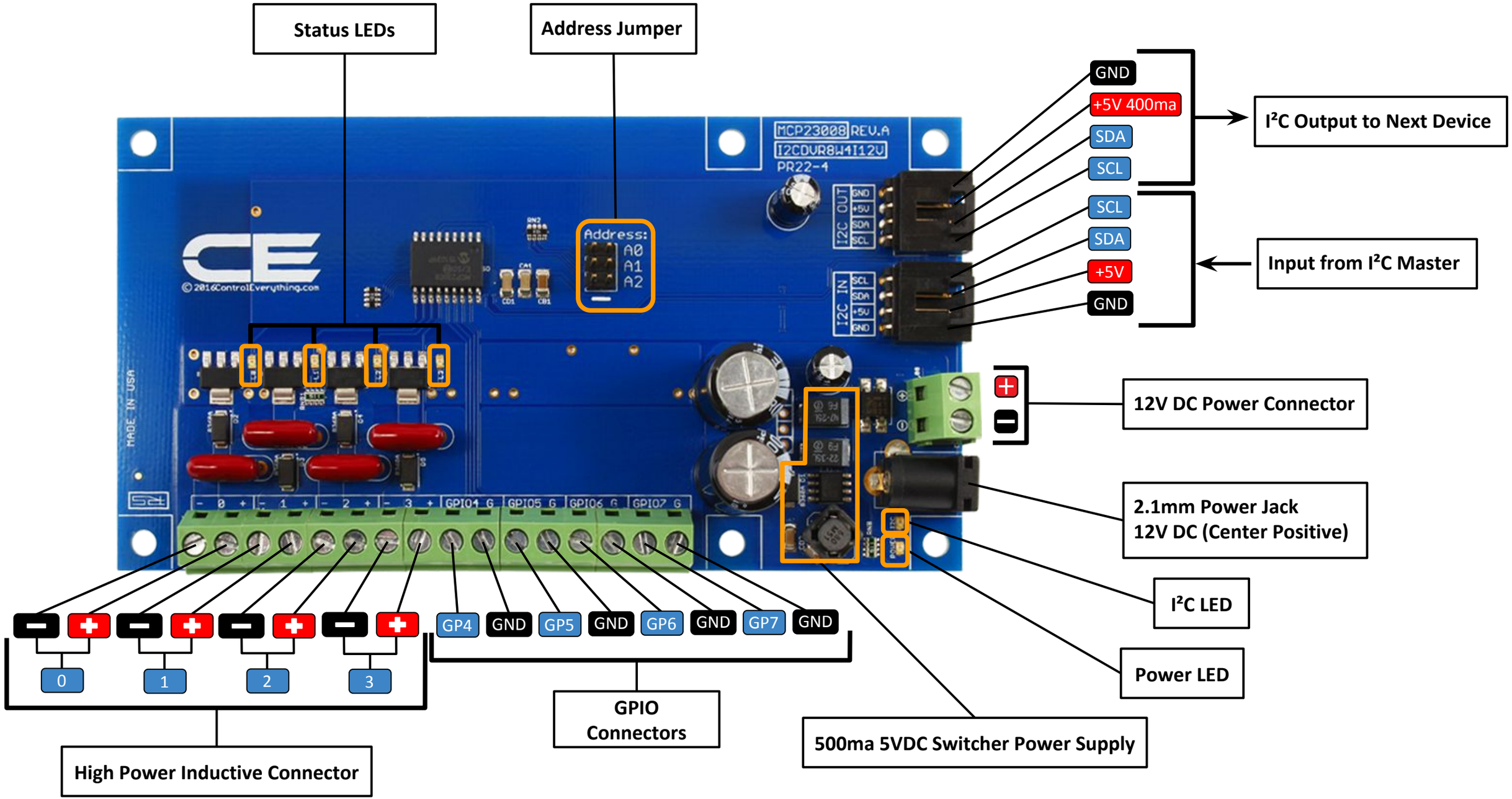
Status LEDs
Address Jumper
GND
+5V 400ma
SDA
SCL
I²C Output to Next Device
SCL
SDA
+5V
GND
Input from I²C Master
12V DC Power Connector
2.1mm Power Jack
12V DC (Center Positive)
I²C LED
Power LED
500ma 5VDC Switcher Power Supply
GP4
GND
GP5
GND
GP6
GND
GP7
GND
GPIO
Connectors
0
1
2
3
High Power Inductive Connector
MCP23008 REV.A
I2CDVR8W4I12V
PR22-4
Address:
A0
A1
A2
I2C OUT
I2C IN
©2016ControlEverything.com
MADE IN USA